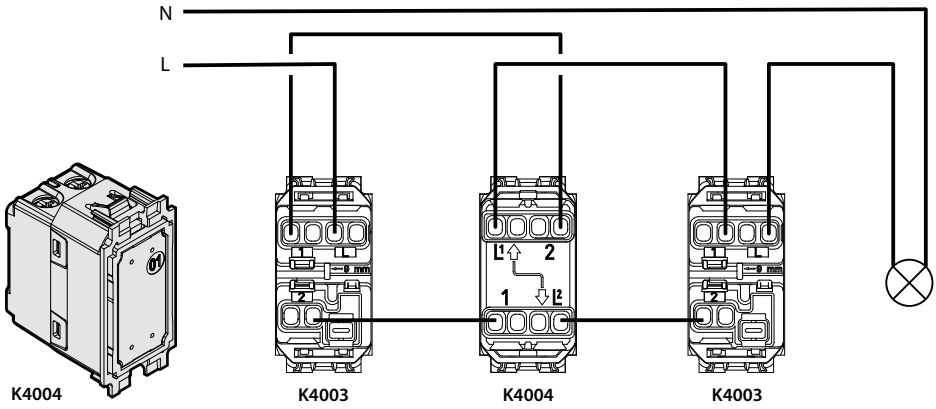
N
L
K4004
K4003
K4004
K4003

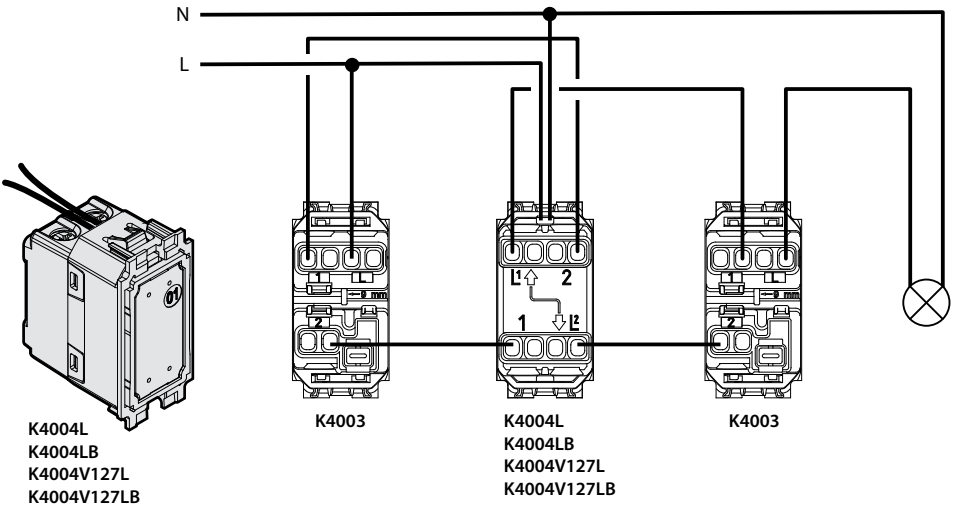
N
L
K4004L
K4004LB
K4004V127L
K4004V127LB
K4003
K4004L
K4004LB
K4004V127L
K4004V127LB
K4003

LE10252AC

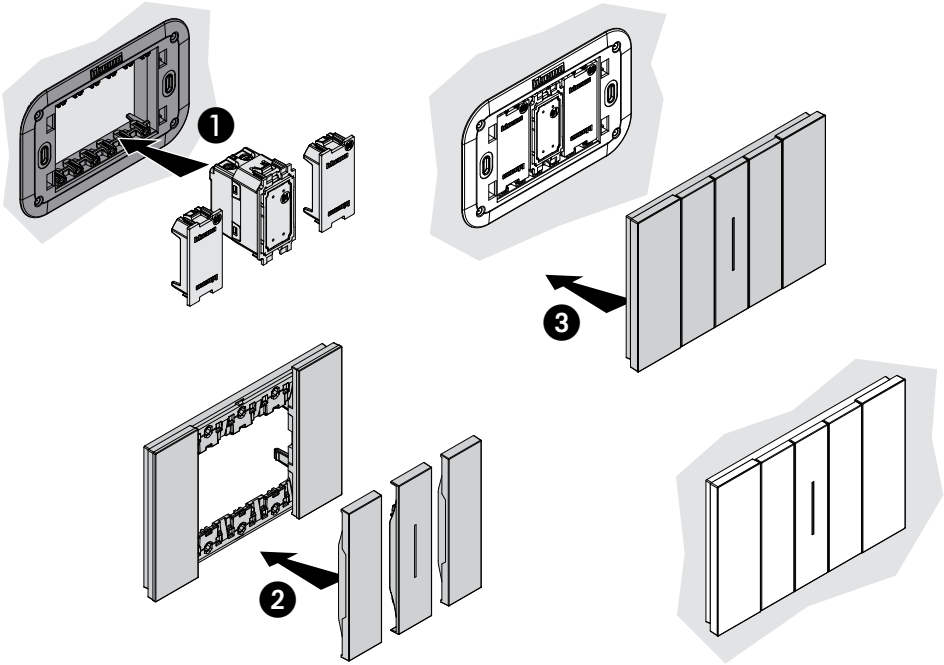
1
2
3

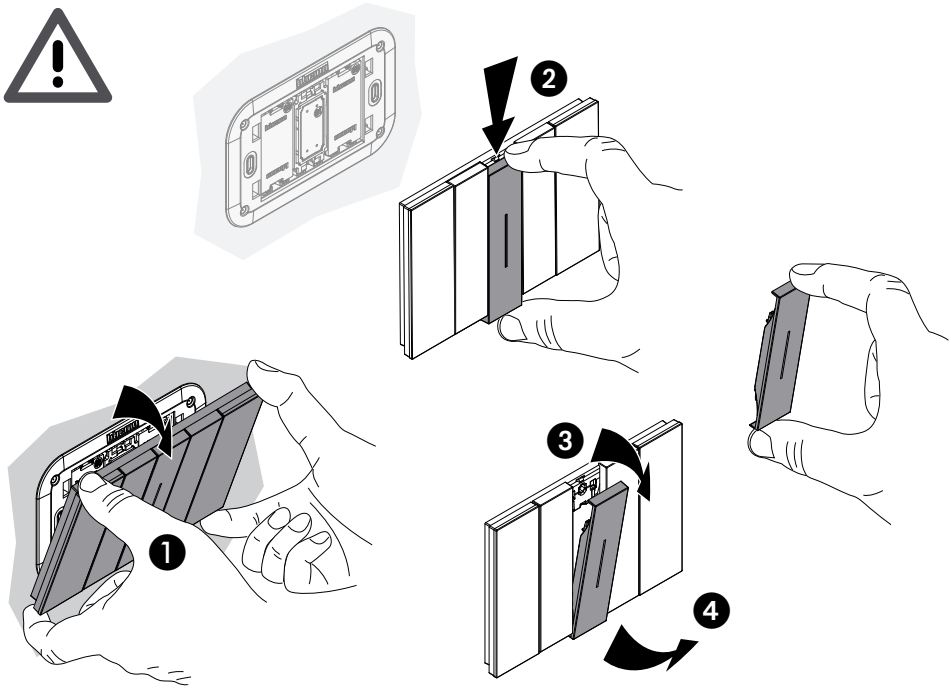
1
2
3
4